[3]

INTERCONNECTIONS			
P1	0V	2	0V
2	DB15 H	40	-5V
3	DB14 H	41	UPF H
4	DB13 H	42	ESYNC L
5	DB12 H	43	SEL L
6	DB11 H	44	DPF H
7	DB10 H	45	ACLO H
8	DB09 H	46	DIAGM H
9	DB08 H	47	QTCK H
10	0V	48	0V
11	DB07 H	49	DMR H
12	DB06 H	50	SEND H
13	DB05 H	51	ZECC H
14	DB04 H	52	DTICK H
15	DB03 H	53	WTBT H
16	DB02 H	54	ADO H
17	DB01 H	55	MSTR H
18	DB00 H	56	PE H
19	IVECT L	57	EXTRESTC H
20	0V	58	0V
21	DMR H	59	RD1 L
22	SPOA H	60	BD2 L
23	DOUT H	61	CKDC L
24	IMSTR L	62	BD3 L
25	CLR L	63	CKUC L
26	UPROE L	64	BD7 L
27	P37H	65	BD6 L
28	BS7 L	66	PORT1 H
29	0V	67	0V
30	BS3 L	68	INDEX H
31	BS4 L	69	BD4 L
32		70	SECTOR H
33	BS6 L	71	CKC1 L
34	BS2 L	72	P21 H
35	BS1 L	73	P20 H
36		74	P22 H
37	INT H	75	P23 H
38	0V	76	0V

J1	
1	0V
2	SERVO CLOCK 0 -
3	READ DATA 0 -
4	0V
5	READ CLOCK0 -
6	WRITE CLOCK0 -
7	0V
8	WRITE DATA0 -
9	SELECTED0 +
10	SEEK END0 -
11	0V
12	INDEX0 -
13	SECTOR0 -
14	SERVO CLOCK0 +
15	0V
16	READ DATA0 +
17	READ CLOCK0 +
18	0V
19	WRITE CLOCK0 +
20	WRITE DATA0 -
21	0V
22	SELECTED0 -
23	SEEK END0 +
24	INDEX0 +
25	0V
26	SECTOR0 +

J2	
1	0V
2	SERVO CLOCK1 -
3	READ DATA1 -
4	0V
5	READ CLOCK1 -
6	WRITE CLOCK1 -
7	0V
8	WRITE DATA1 -
9	SELECTED1 +
10	SEEK END1 -
11	0V
12	INDEX1 -
13	SECTOR1 -
14	SERVO CLOCK1 +
15	0V
16	READ DATA1 +
17	READ CLOCK1 +
18	0V
19	WRITE CLOCK1 +
20	WRITE DATA1 -
21	0V
22	SELECTED1 -
23	SEEK END1 +
24	INDEX1 +
25	0V
26	SECTOR1 +

1	A	2
BIRQ6 L	A	+5V
BIRQ7 L	B	
BADI6 L	C	0V
BADI7 L	D	
	E	BDOUT L
	F	BRPLY L
	H	BDIN L
0V	J	BSYNC L
	K	BWTBT L
	L	BIRQ
0V	M	BIAK1 L
BDMR L	N	BIAK0 L
	P	BBS7 L
	R	BDMGI L
	S	BDMGO L
0V	T	BINIT L
	U	BDAL00 L
	V	BDAL01 L

1	B	2
BDCOK H	A	+5V
BPOK H	B	
	C	0V
	D	
	E	BDAL02 L
	F	BDAL03 L
	H	BDAL04 L
0V	J	BDAL05 L
	K	BDAL06 L
	L	BDAL07 L
0V	M	BDAL08 L
BSACK L	N	BDAL09 L
BIRQ5 L	P	BDAL10 L
	R	BDAL11 L
	S	BDAL12 L
0V	T	BDAL13 L
	U	BDAL14 L
	V	BDAL15 L

1	C	2
	A	+5V
	B	
	C	0V
	D	
	E	
	F	
	H	
0V	J	
	K	
	L	
0V	M	
	N	
	P	
	R	
	S	
0V	T	
	U	
	V	

1	D	2
	A	+5V
	B	
	C	0V
	D	+12V
	E	
	F	
	H	
0V	J	
	K	
	L	
0V	M	
	N	
	P	
	R	
	S	
0V	T	
	U	
	V	

REFERENCE DESIGNATION	GATES USED PER TOTAL	PART NO.
U5	3/4	74S08
U12	5/6	74S04
U45	4/6	74S04
U56	5/6	74S04
U93	3/4	8641
U94	2/4	8641

LAST DESIGNATION USED	
INTEGRATED CIRCUIT	U94
DELAY LINE	DL2
LIGHT EMITTING DIODE	LED4
RESISTOR MODULE	RM12
CAPACITOR	C36
FUSE	F1
RESISTOR	R32
VOLTAGE REGULATOR	VR1

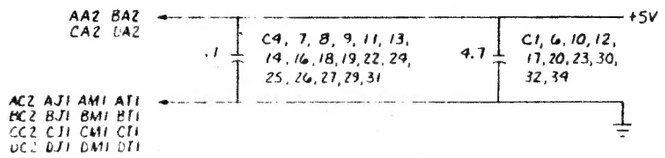

REVISIONS			
LTR	DESCRIPTION	DATE	APPROVED
A	ECO-0196 RELEASE	11-8-79	
B	ECO-0221 INCORPORATED	7-31-80	DLC
B	ECO-0216 INCORPORATED	[illegible]	

NOTES: UNLESS OTHERWISE SPECIFIED

1. CAPACITANCE TOLERANCES AND VOLTAGES ARE AS FOLLOWS: PICOFARADS - ±5%, 100V; 4.7 MICROFARADS - ±20% 10V; 15 MICROFARADS - ±20% 20V.
2. CAPACITANCE VALUES ARE IN MICROFARADS
3. RESISTANCE VALUES ARE IN OHMS, ±5%, 1/4W.
4. ▷ DENOTES INTERCONNECT PINS.

TOLERANCES UNLESS OTHERWISE SPECIFIED FRACTIONS DEC ANGLES	
APPROVALS	DATE
DRAWN B	3-12-79

SCHEMATIC DIAGRAM - SMD1
SMD QUAD CONTROLLER
LSI-11

REVISIONS			
LTR	DESCRIPTION	DATE	APPROVED
	SEE SHEET ONE		

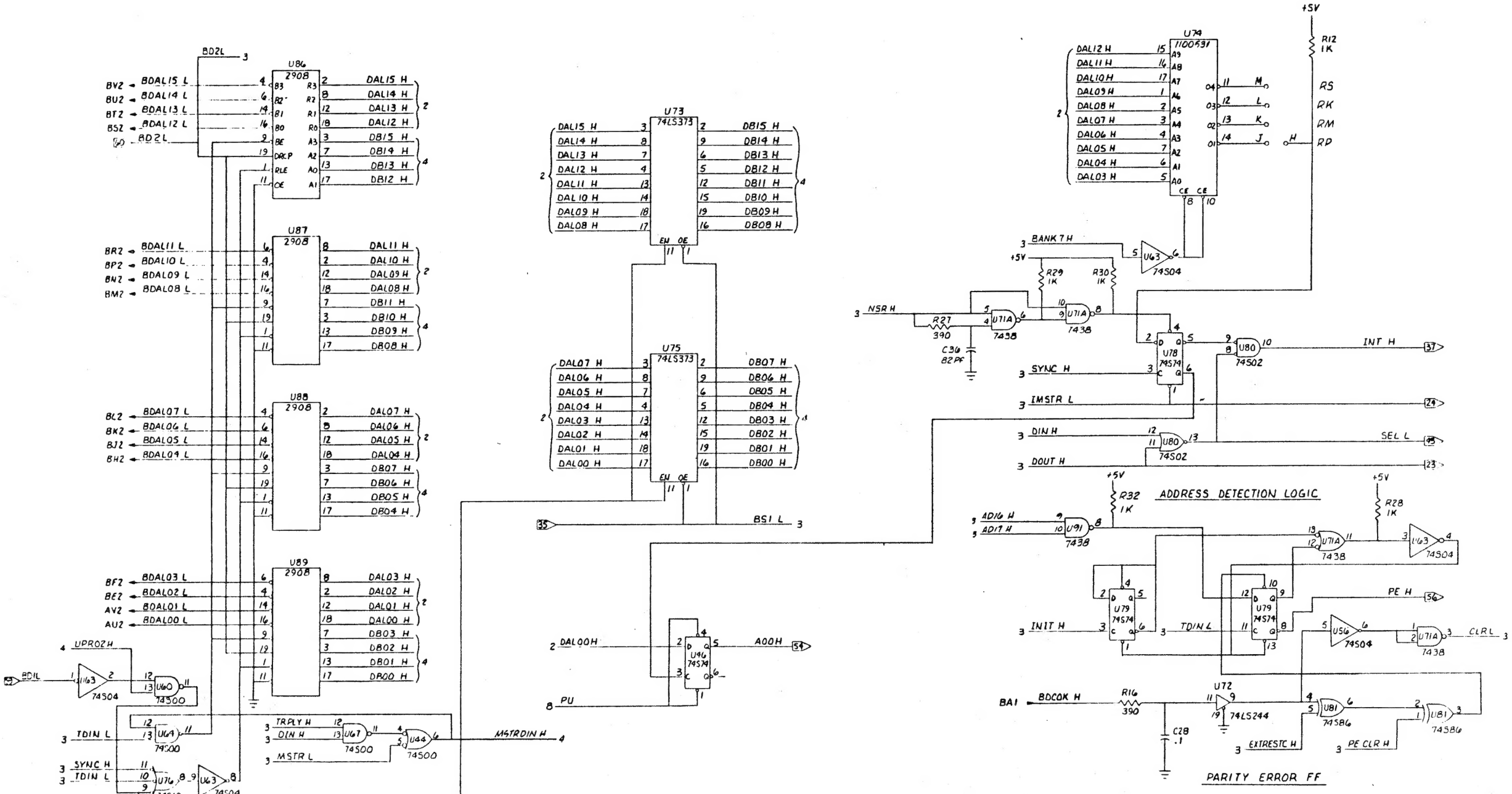

TOLERANCES UNLESS OTHERWISE SPECIFIED FRACTIONS DEC ANGLES		
APPROVALS	DATE	SCHEMATIC DIAGRAM - SU01 SMD QUAD CONTROLLER LSI-11
DRAWN B.	3-12-79	
CHECKED		SCALE / SIZE D / DRAWING NO SU01106 02

REVISIONS			
LTR	DESCRIPTION	DATE	APPROVED
*	SEE SHEET ONE		

U51 74LS 259
P23 H
P22 H
P21 H
P20 H
TIRQ H
TRPLY H
WRITE H
PE CLR H
TDMR H
BIT H
UPF H
U12 74S04
U63 74S04
R10 180
C15 82 pf
CKUC L
EXTRESTC H
U77 7438
R31 1K
+5V
R13 1K
P N
CLR L
CLR L 2,5,7
R18 180
R23 180
R17 390
R22 390
R19 2K
R24 20K
C33 820 pf
BDMGI L
BIAKI L
BBST L
BINIT L
BIRQ6L
RPOK H
U90 8837
BANK7 H
INIT H
IRQ6 H
ACLO H
BII H
U63 74S04
UPROZ H
BDZL
U67 74S00
U66 74S74
U15 74S00
U48 74S02
MSTR L
U49 74S74
BSI L
U50 74LS08
RPLY H
U76 74S10
TSYNC L
U48 74S02
MSTR H
DL1 250 NS
DL2 250 NS
U65 74S02
U50 74LS08
R11 180
C21 820 pf
U47 74S74
CLAIM H
U64 74S00
TSYNC L
SYNC H
RPLY H
NSR H
MSTR H
MSTR L
IRQ6 H
IRQ7 H
U65 74S02
U67 74S00
ESYNC L
U92 8641
R25 20K
+5V
BRPLY L
BSYNC L
BDMR L
BIRQ7L
RPLY H
SYNC H
DMR H
IRQ7 H
U80 74S02
U78 74S74
U68 74S74
TDOUT H
TDIN L
TDIN H
U93 8641
BDOUT L
BDIN L
BWTBT L
DOUT H
DIN H
WTBT H
MSTR L
QTCK H
BIRQ4L
BIRQ5L
U77 7438
BSACK L
MSTR H
U91 7438
C42
CR2
R21 180
BDMGO L
U94 8641
TAI6 H
TAI7 H
BAD16 L
BAD17L
AD16 H
AD17 H
PU
U99 74S74
DIN H
R20 180
BIAKO L
CN2
CM2
R15 1K
IMSTR L

QBUS CONTROL

TOLERANCES UNLESS OTHERWISE SPECIFIED
FRACTIONS DEC ANGLES
APPROVALS DATE
DRAWN B. 3-12-79
CHECKED
SCALE
SIZE D
DRAWING NO SUQ110602
DO NOT SCALE DRAWING
SHEET 3 OF 8

SCHEMATIC DIAGRAM - SUQI
SMD QUAD CONTROLLER
LSI - 11

REVISIONS			
LTR	DESCRIPTION	DATE	APPROVED
	SEE SHEET ONE		

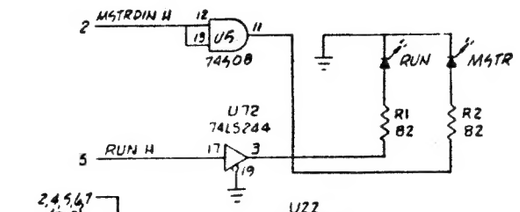

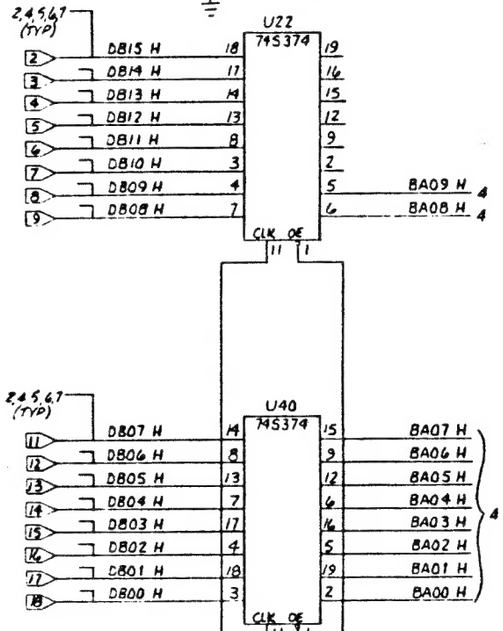

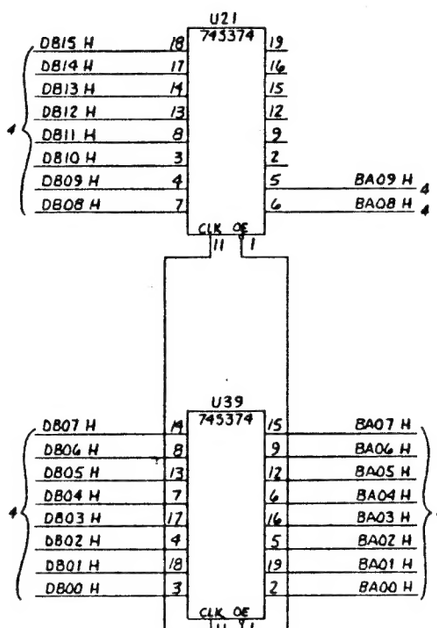

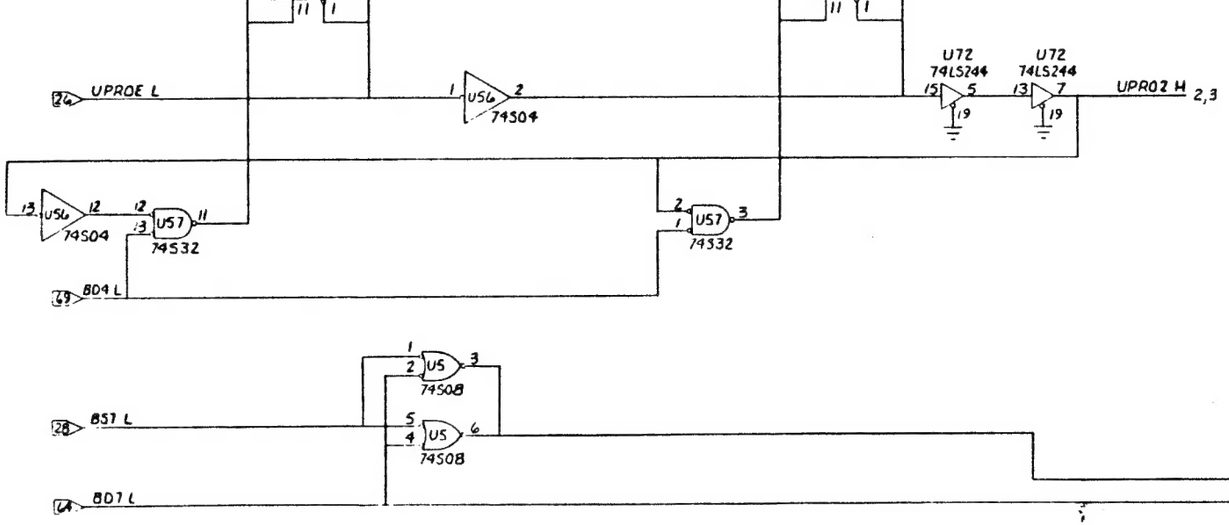

BUFFER ADDRESS REGISTER

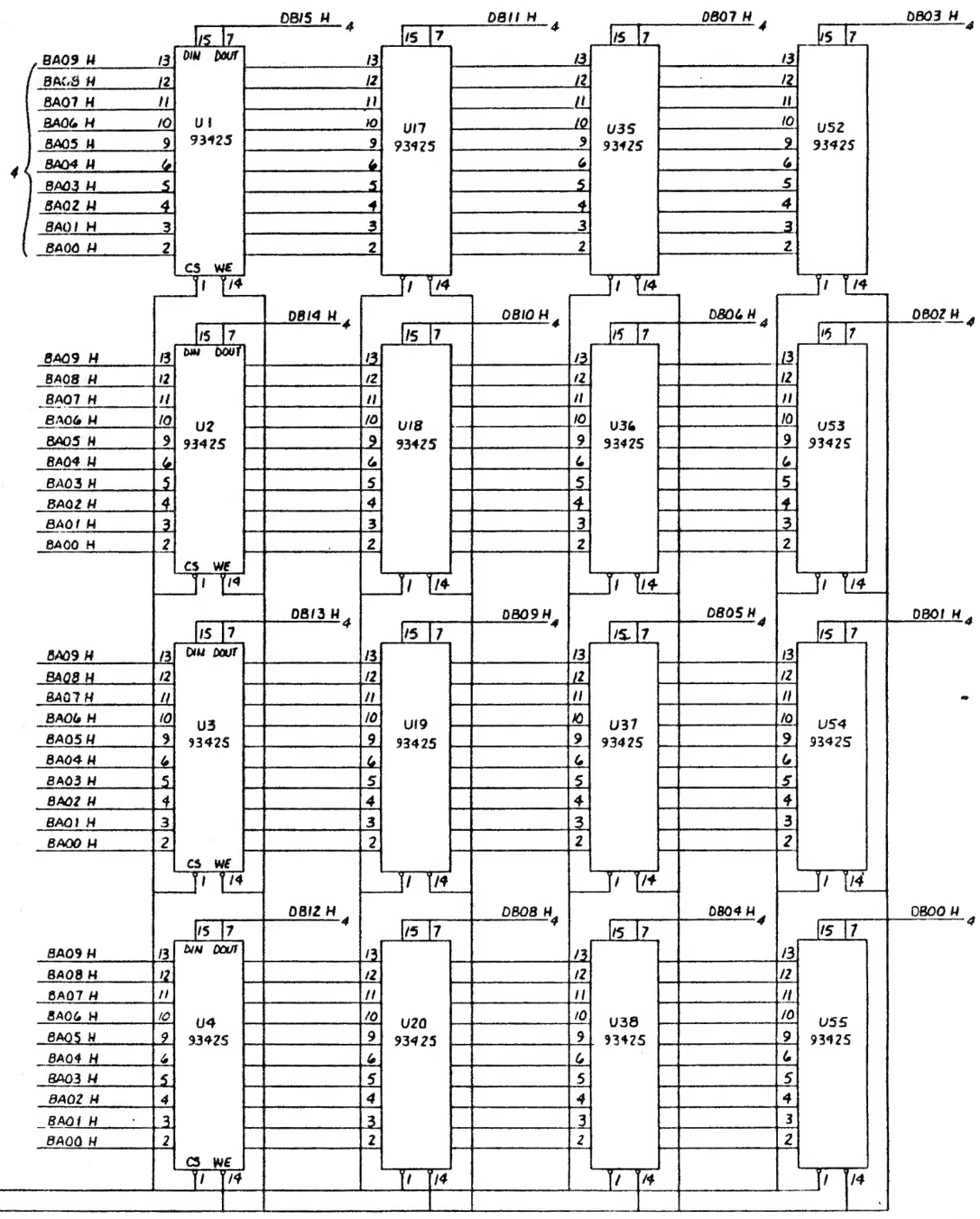

BUFFER

TOLERANCES UNLESS OTHERWISE SPECIFIED FRACTIONS DEC ANGLES . 1 .		SCHEMATIC DIAGRAM - SU01 SMD QUAD CONTROLLER LSI-11	
APPROVALS	DATE		
DRAWN B.	3-12-79	SCALE	SIZE D DRAWING NO SU0110602
CHECKED		DO NOT SCALE DRAWING	SHEET 4 OF 8

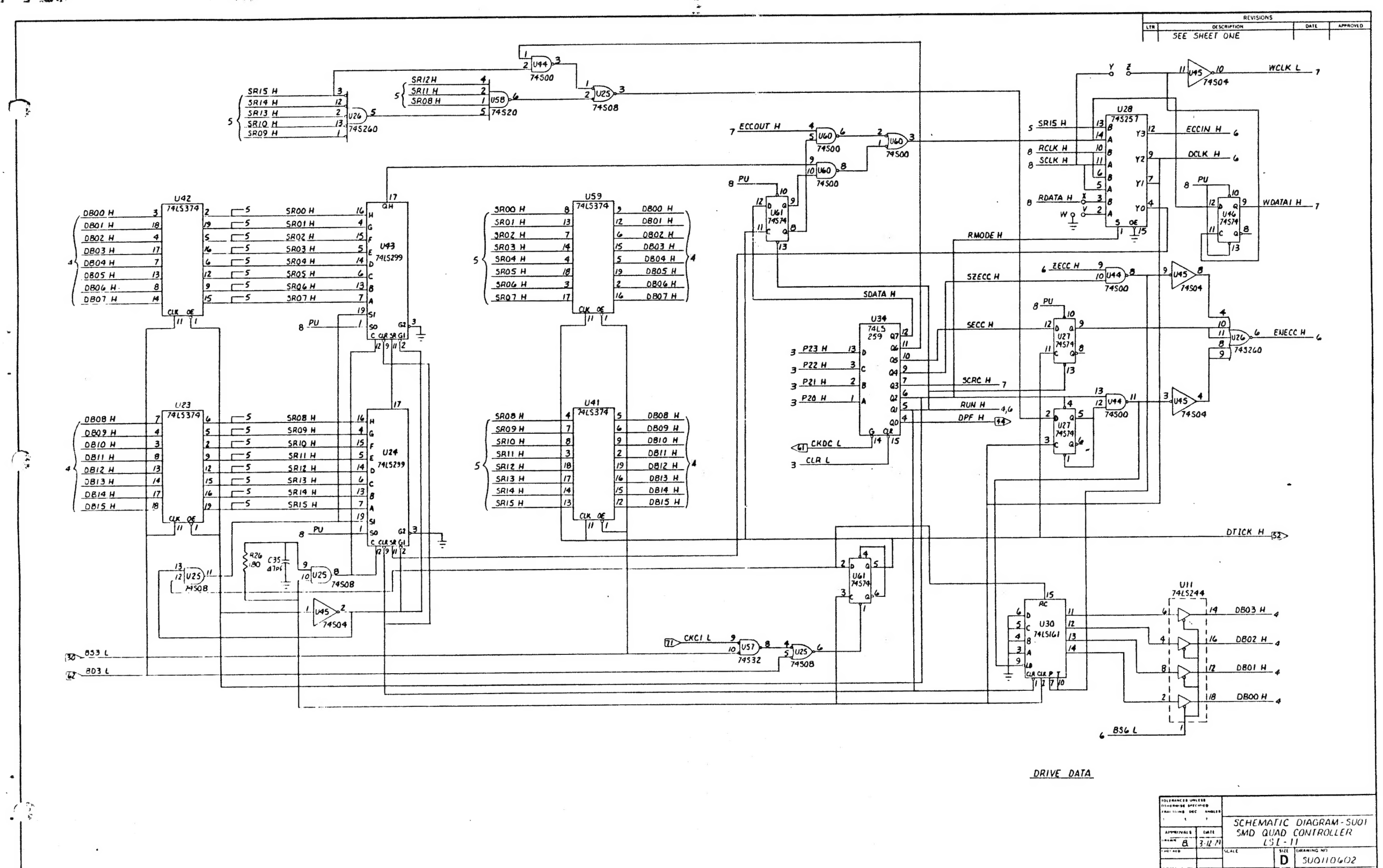
REVISIONS
LTR
DESCRIPTION
DATE
APPROVED
SEE SHEET ONE
U42 74LS374
U43 74LS299
U59 74LS374
U23 74LS374
U24 74LS299
U41 74LS374
U34 74LS259
U28 74S257
U27 74S74
U46 74S74
U61 74S74
U30 74LS161
U11 74LS244
U26 74S260
U44 74S00
U45 74S04
U25 74S08
U57 74S32
U60 74S00
U58 74S20
U26 74S260
U44 74S00
U45 74S04
U25 74S08
U45 74S04
U57 74S32
U25 74S08
U60 74S00
U61 74S74
U46 74S74
U27 74S74
U26 74S260
U11 74LS244
SR15 H
SR14 H
SR13 H
SR10 H
SR09 H
SR12 H
SR11 H
SR08 H
ECCOUT H
PU
SR00 H
SR01 H
SR02 H
SR03 H
SR04 H
SR05 H
SR06 H
SR07 H
DB00 H
DB01 H
DB02 H
DB03 H
DB04 H
DB05 H
DB06 H
DB07 H
DB08 H
DB09 H
DB10 H
DB11 H
DB12 H
DB13 H
DB14 H
DB15 H
SR08 H
SR09 H
SR10 H
SR11 H
SR12 H
SR13 H
SR14 H
SR15 H
SDATA H
P23 H
P22 H
P21 H
P20 H
CKDC L
CLR L
RMODE H
SZECC H
SECC H
SCRC H
RUN H
DPF H
ZECC H
ECCIN H
DCLK H
RDATA H
WDATA1 H
WCLK L
ENECC H
DTICK H
CKC1 L
BS3 L
BD3 L
BS6 L
R26 180
C35 47pf
DRIVE DATA
SCHEMATIC DIAGRAM-SU01
SMD QUAD CONTROLLER
LSI-11
APPROVALS
DATE
DRAWN B
3-12-79
SCALE
SIZE D
DRAWING NO SU0110602

REVISIONS			
LTR	DESCRIPTION	DATE	APPROVED
	SEE SHEET ONE		

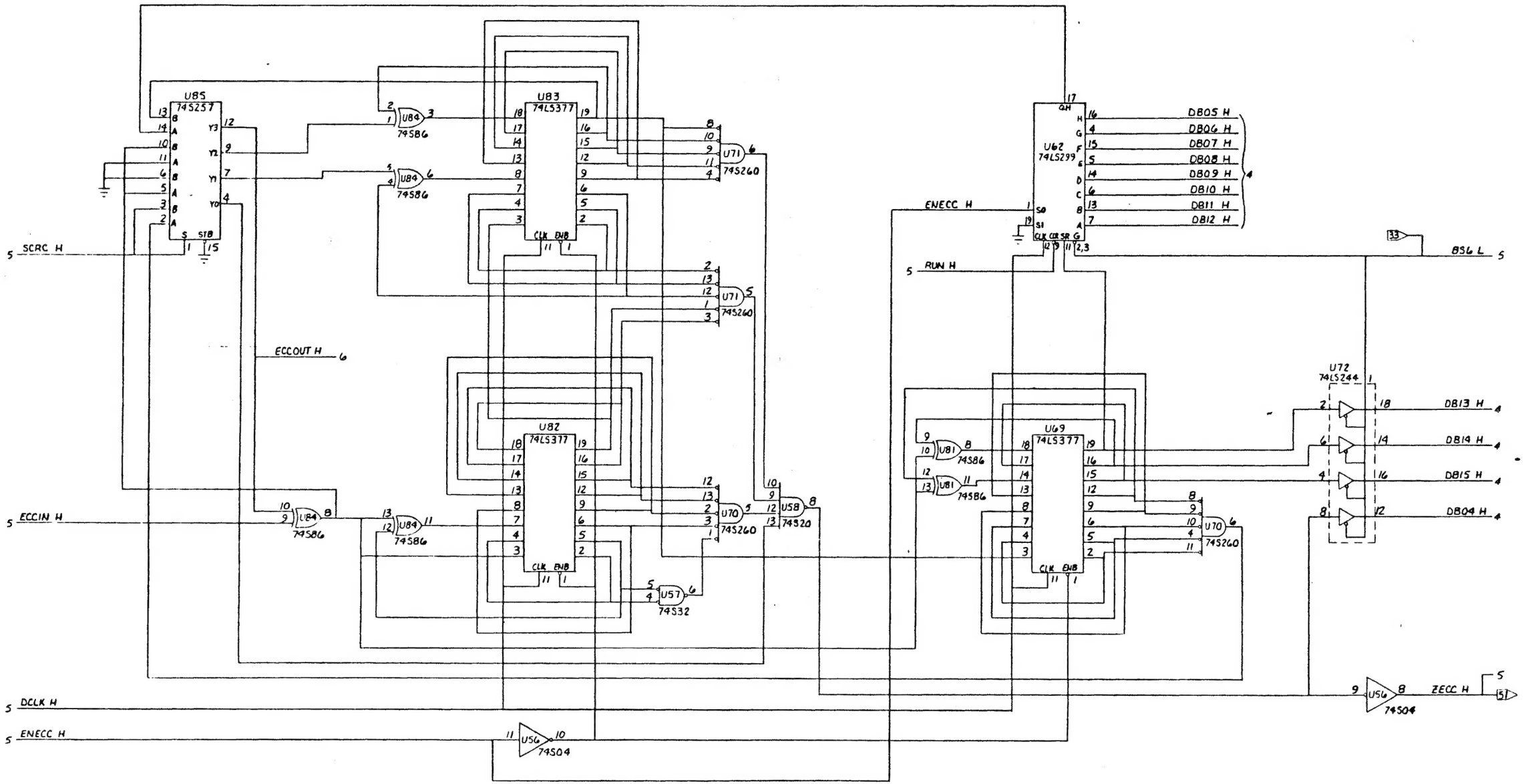

ECC REGISTER AND ZERO DETECT

TOLERANCES UNLESS OTHERWISE SPECIFIED FRACTIONS DEC ANGLES		SCHEMATIC DIAGRAM - 5001 SMD QUAD CONTROLLER LSI-11
APPROVALS	DATE	
DRAWN B.	3-12-79	

REVISIONS			
LTR	DESCRIPTION	DATE	APPROVED
	SEE SHEET ONE		

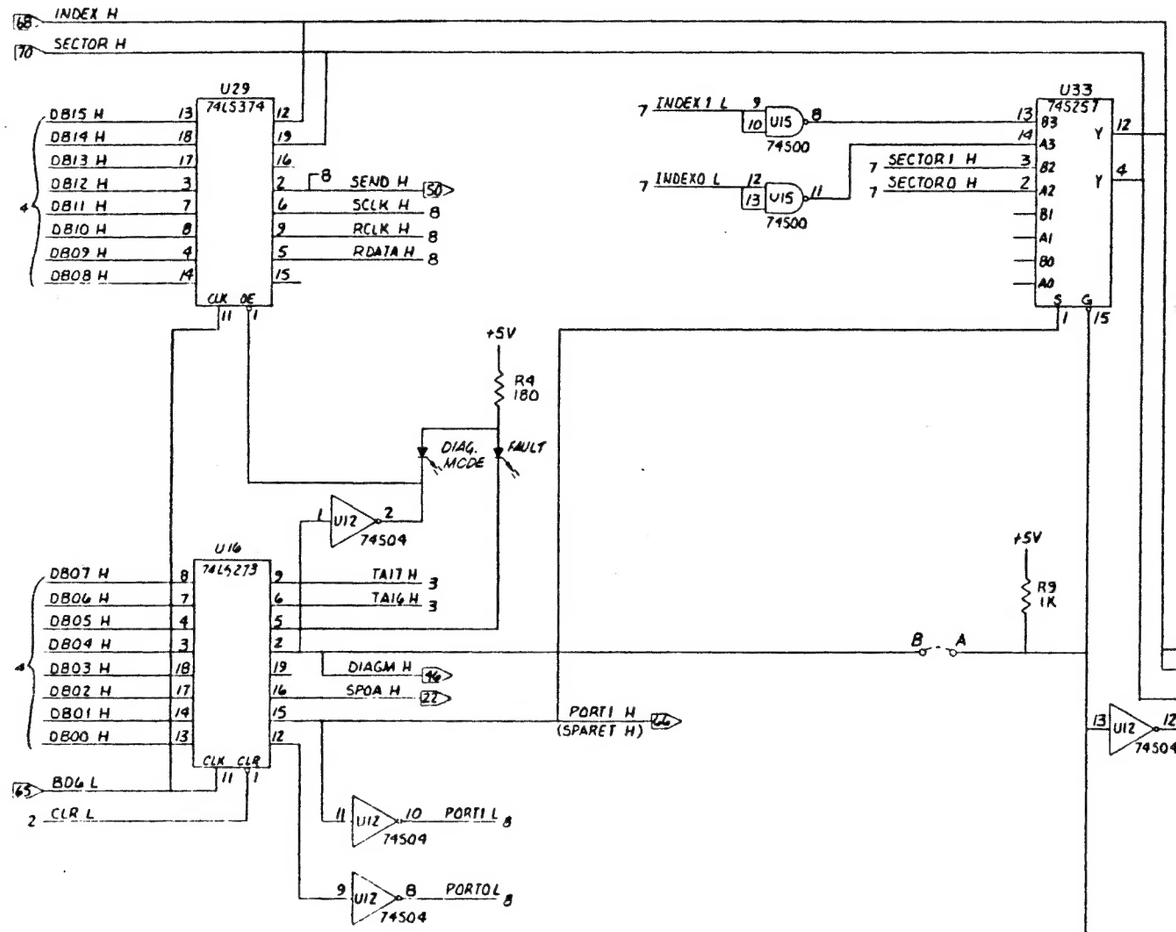

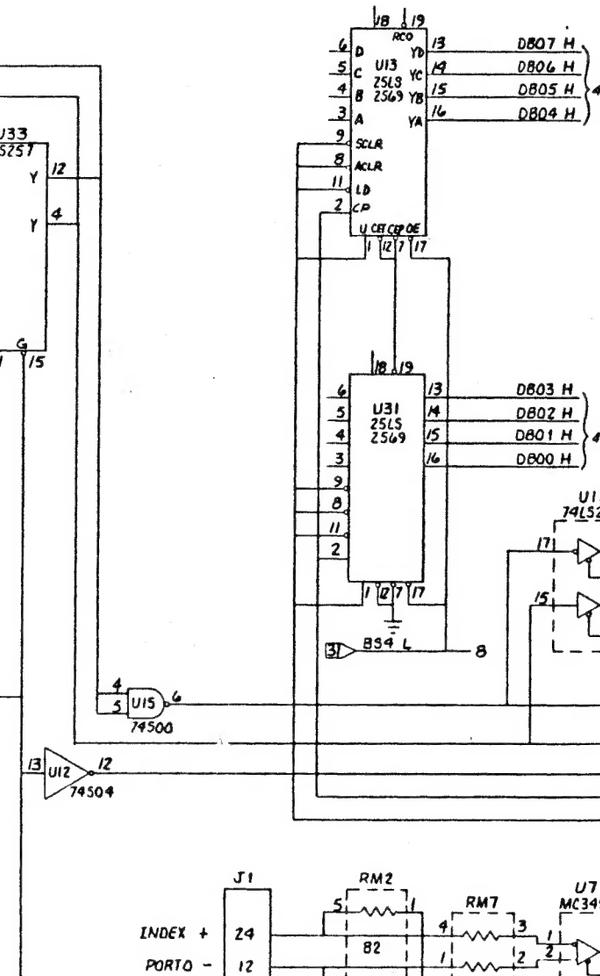

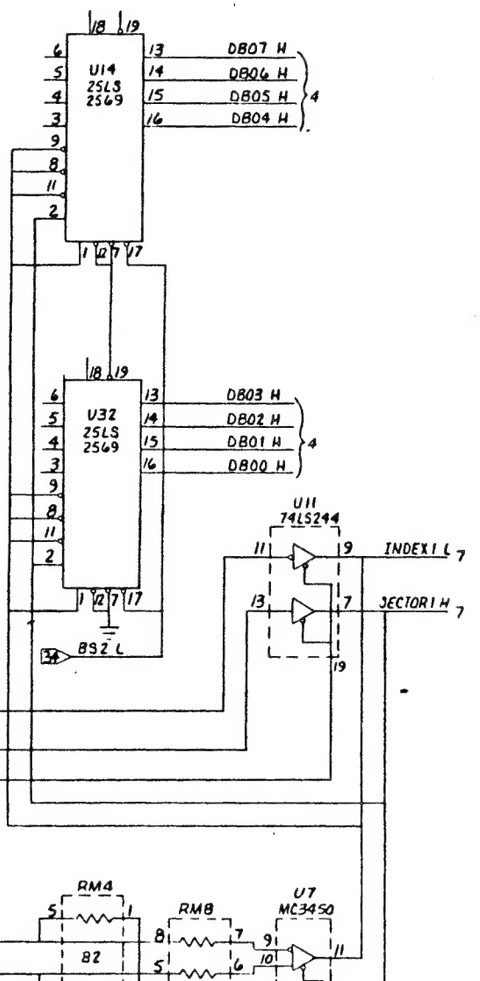

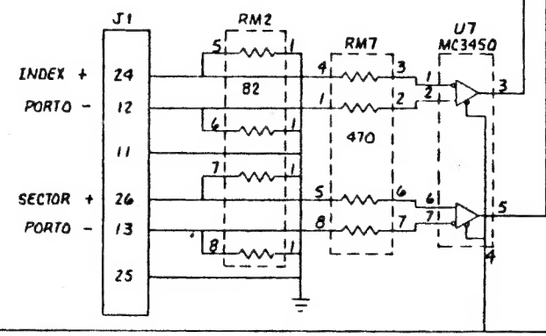

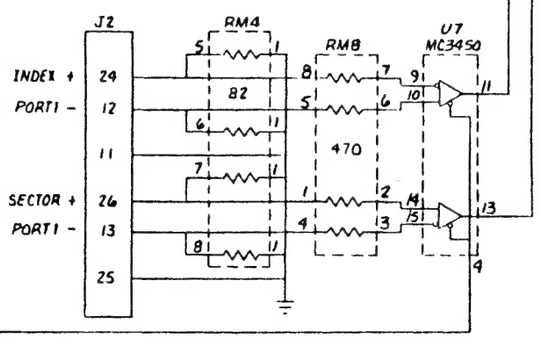

TOLERANCES UNLESS OTHERWISE SPECIFIED FRACTIONS DEC ANGLES		SCHEMATIC DIAGRAM SU01 SMD QUAD CONTROLLER LSI-11
APPROVALS	DATE	
DRAWN B.	3-12-79	
CHECKED		SCALE — SIZE D — DRAWING NO. SU0110602
		DO NOT SCALE DRAWING — SHEET 7 of 8

REVISIONS			
LTR	DESCRIPTION	DATE	APPROVED
-	SEE SHEET ONE		

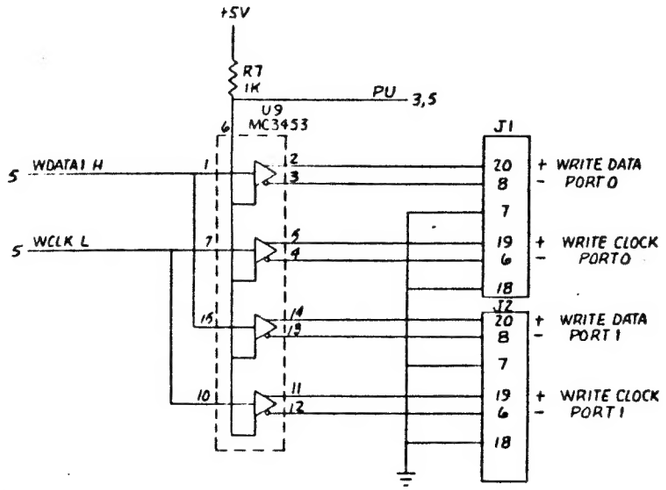

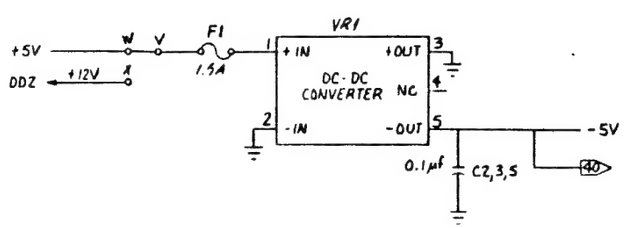

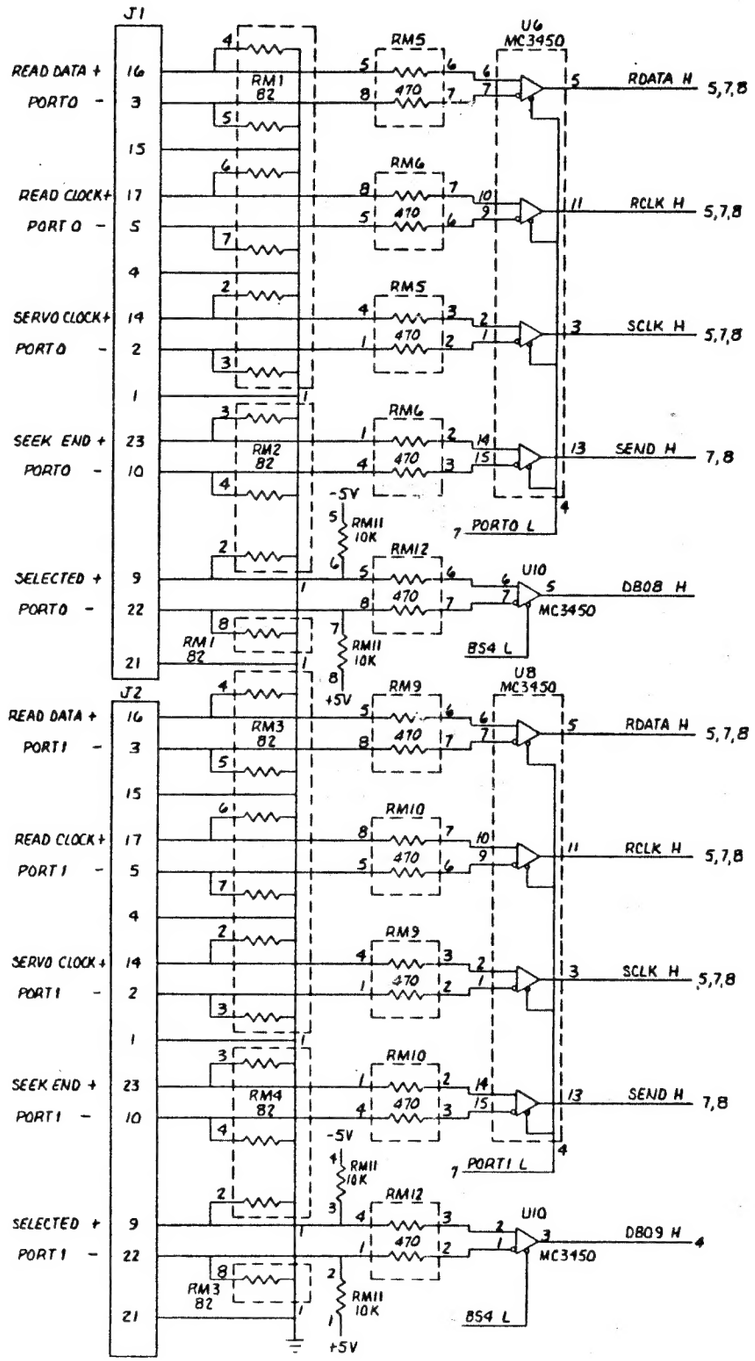

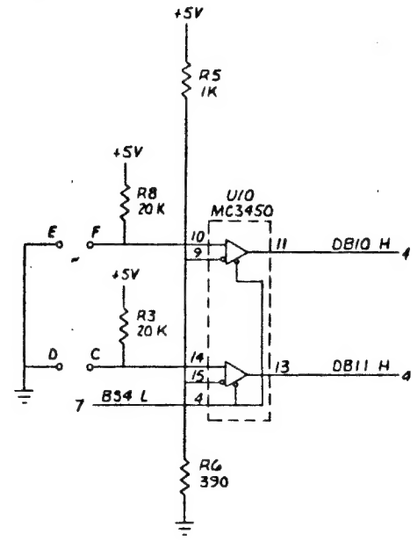

TOLERANCES UNLESS OTHERWISE SPECIFIED FRACTIONS DEC ANGLES		SCHEMATIC DIAGRAM - SU01 SMD QUAD CONTROLLER LSI-11	
APPROVALS	DATE		
DRAWN B	3-12-18		
CHECKED		SCALE	SIZE D
			DRAWING NO SU0110602
		DO NOT SCALE DRAWING	SHEET 8 OF 8